BOMBARDIER GLOBAL EXPRESS

9H-SOC



Pilots	Stewardess	Max. Passengers	Max. Range
2	1	11	11,140 km

ONBOARD SERVICES

Coffee & Tea · Open Bar · Newspapers · Internet Wi-Fi · Microwave & Oven · Bluetooth Speaker · Power Plug · Private Lavatory · Satellite Phone

FLOORPLAN



Day Configuration



Night Configuration

CABIN HEIGHT / WIDTH

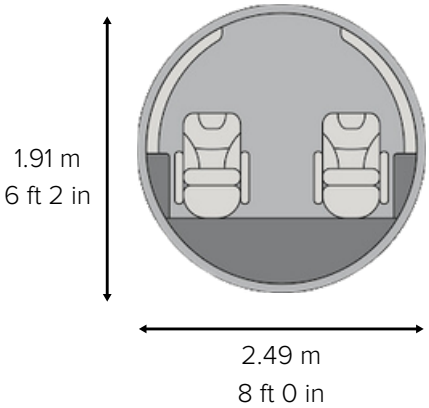







© Astonjet and related trademarks or registered trademarks herein are property of Astonjet Limited or an affiliate thereof. All rights reserved. Aircraft images, layouts, ranges, and/or figures are provided informational purposes only, are subject to change, and may differ from the specific aircraft arranged. Astonjet makes no representation or warranty with respect to the accuracy of this information or any underlying assumptions and disclaims any obligation to update such estimates.